Rating	20A 125V,10A 277V AC 3/4HP 125–250 VAC	Mount Hole	Circuit Structure
Contact R	50m ohm Max.	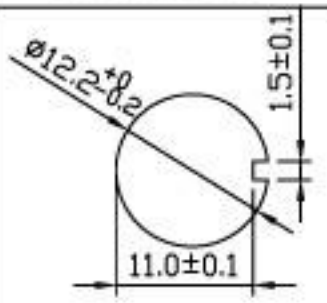	
Insulation R	DC 500V 100M ohm Min.		
Dielectric Strength	AC 1500V 1 minute		
Circuit	**3P SPDT ON-ON**		
Operation Force	700g±200g		

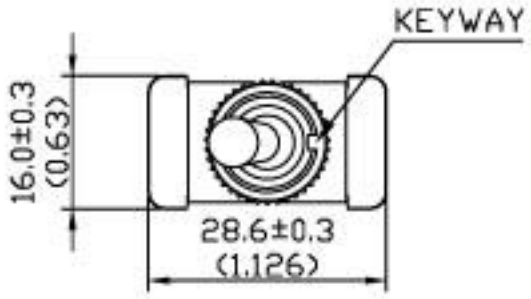

1 HEX NUT ASSY
1 KNURL NUT ASSY

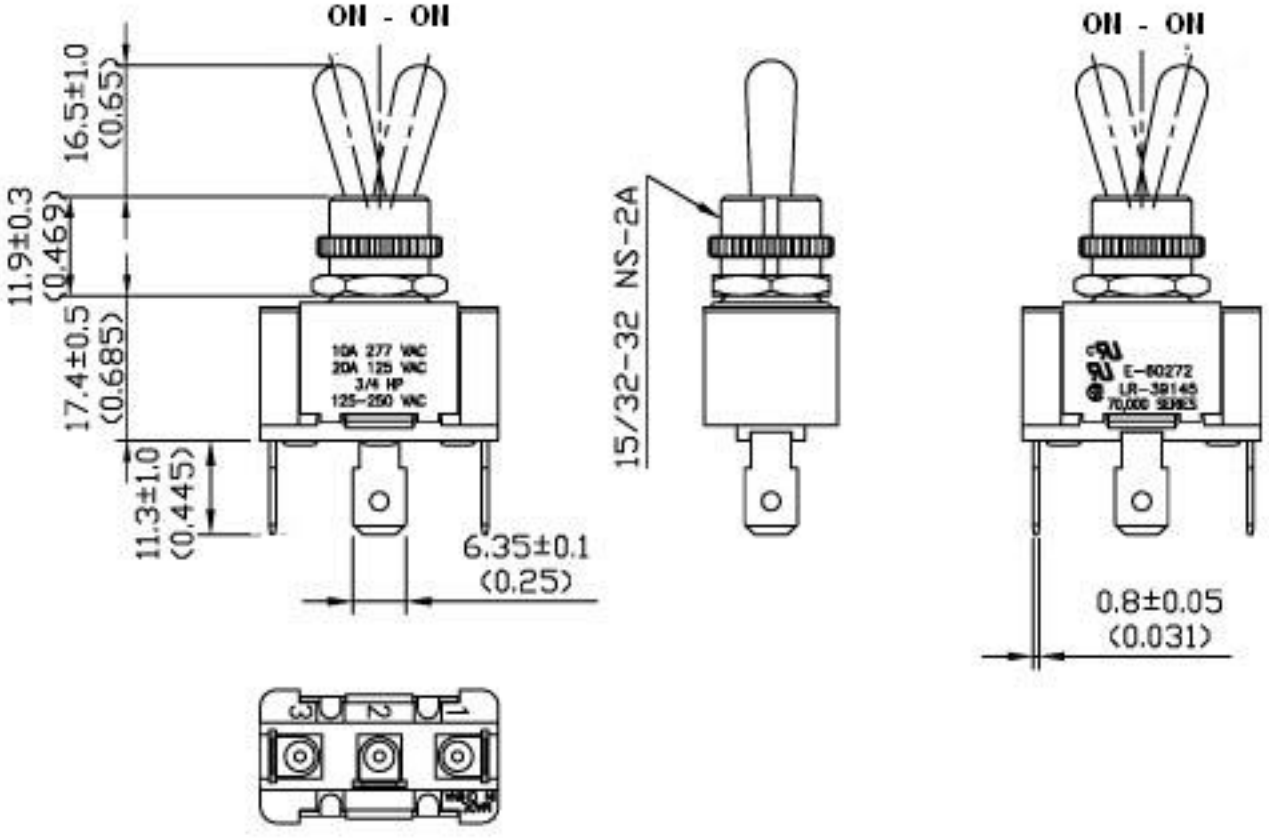

Unit	mm (inch)	SPEMCO	1186-Q/20	REV.	1	