Rating	10A 277VAC,20A 125VAC 1½HP 125–250VAC	Mount Hole	Circuit Structure
Contact R	50m ohm Max.	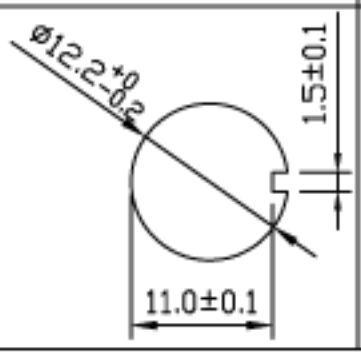	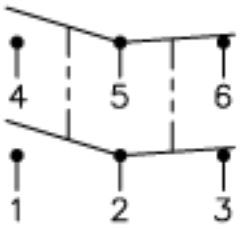
Insulation R	DC 500V 100M ohm Min.		
Dielectric Strength	AC 1500V 1 minute		
Circuit	6P DPDT ON–ON		
Operation Force	1200g±400g		

HEX NUT ASSY

KNURL NUT IN BULK

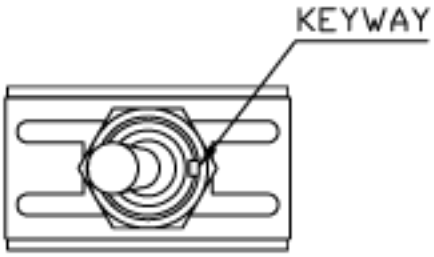

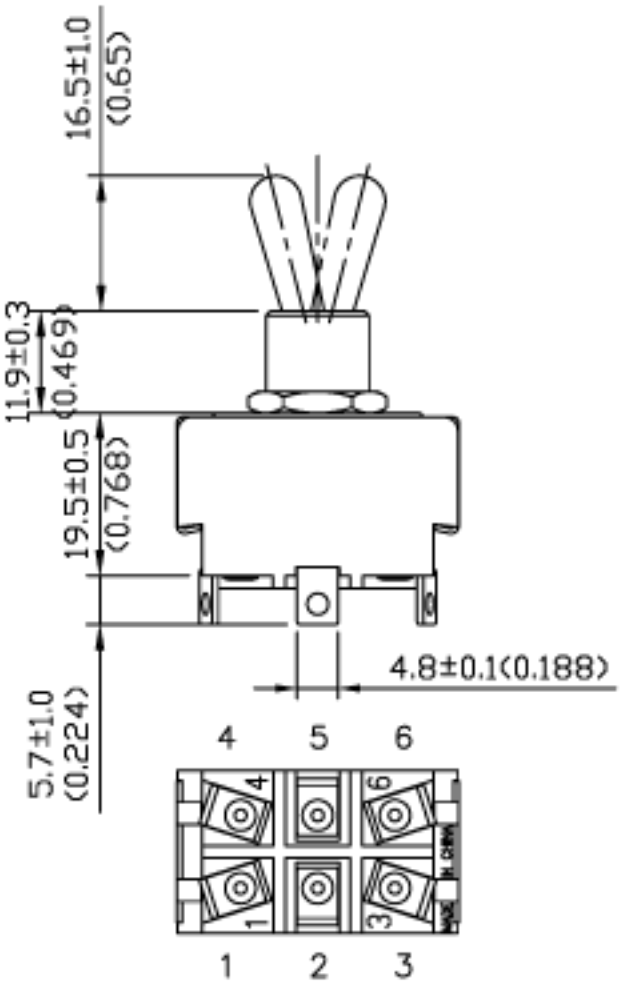

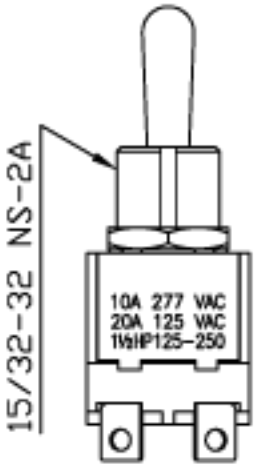

Unit	mm (inch)	SPEMCO	1194-S/20	REV.	1